ALT.NO	ALT.DATE	ZONE	ALTERATIONS	AUTHORITY
NIL	NIL	NIL	NIL	NIL

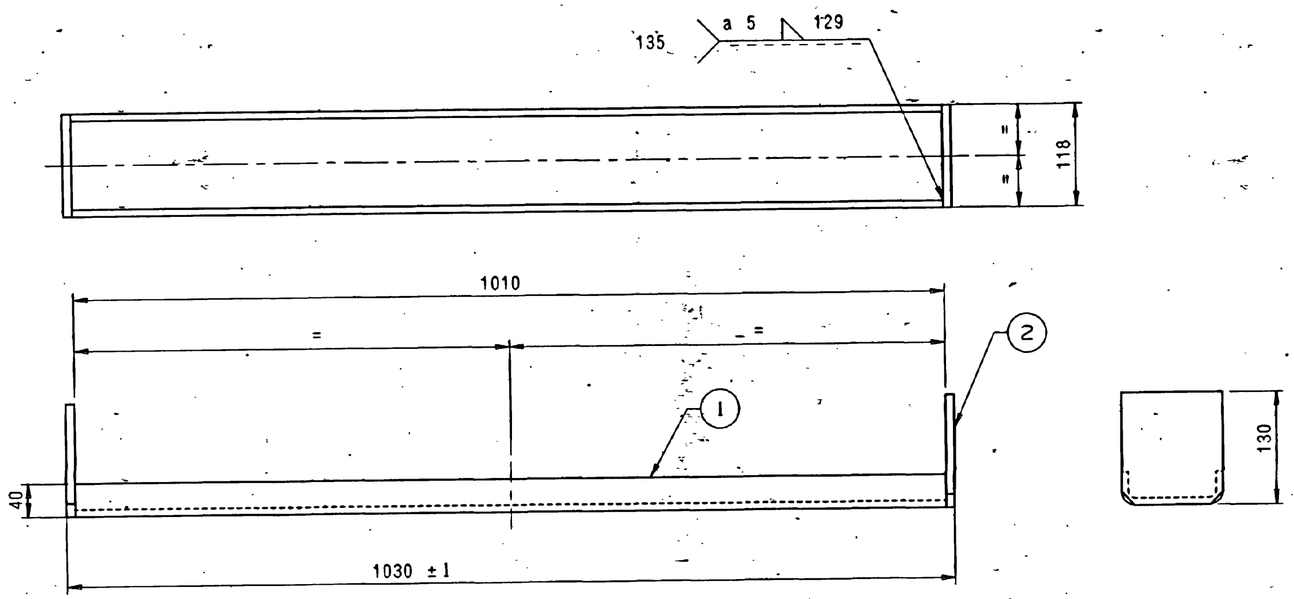

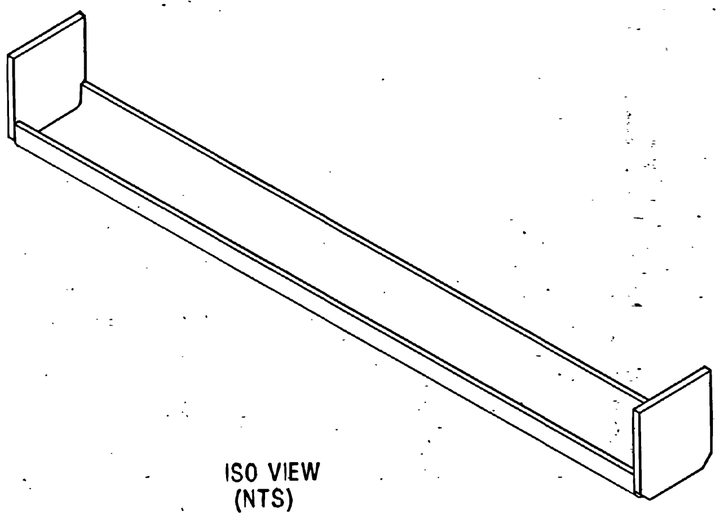

ISO VIEW
(NTS)

2	RIB	2	EM03112	NIL	NIL
1	CHANNEL	1	EM03121	NIL	NIL
ITEM	DESCRIPTION & DIMENSIONS	QPASSLY	DETAIL DRG	MATL. & SPEC.	REMARKS

GROUP: BOGIE FRAME — SUPERSEDES: NIL

FILE: \\Nas\bogie\assly\16t_bog_drg\em\em03104.prt(3D)

WELD LENGTH	0.258 M
WEIGHT	13.000 KG
S.AREA	0.427 M²
LENGTH / ~~DIA~~	1.030 M
WIDTH / ~~THICK~~	0.118 M
HEIGHT	0.130 M

CHANNEL ASSLY. FOR L.S. BEAM
FOR AIR SPRING TYPE MEMU/DMC BOGIES

RAIL COACH FACTORY, KAPURTHALA

INDIAN RAILWAYS STANDARD

SCALE	1:5	SSE/REC	20/7/04
CHD			
DRN	Raj		
REF.DRG.No.	NIL		
PL NO.	NIL		
DRG.NO.	EM03104		
ALT.	NIL	SIZE A2	SHEET 1/1

ADE/SME — CME — CDE

DETAIL DRGS STARTING WITH "LI" ARE INTERNAL REFERENCE LISTS ONLY AND ARE NOT FOR ISSUE

ANY MANUAL ALTERATION SHALL AUTOMATICALLY RENDER THIS DRAWING INVALID.

FOR UNTOLERANCED DIMENSIONS REFER MDG0008 | DATE OF FIRST ISSUE 20/04/2004 | CGM BY - Raj

Entered
Date
20 JUL 2004